Parts List

62 / 63 Series

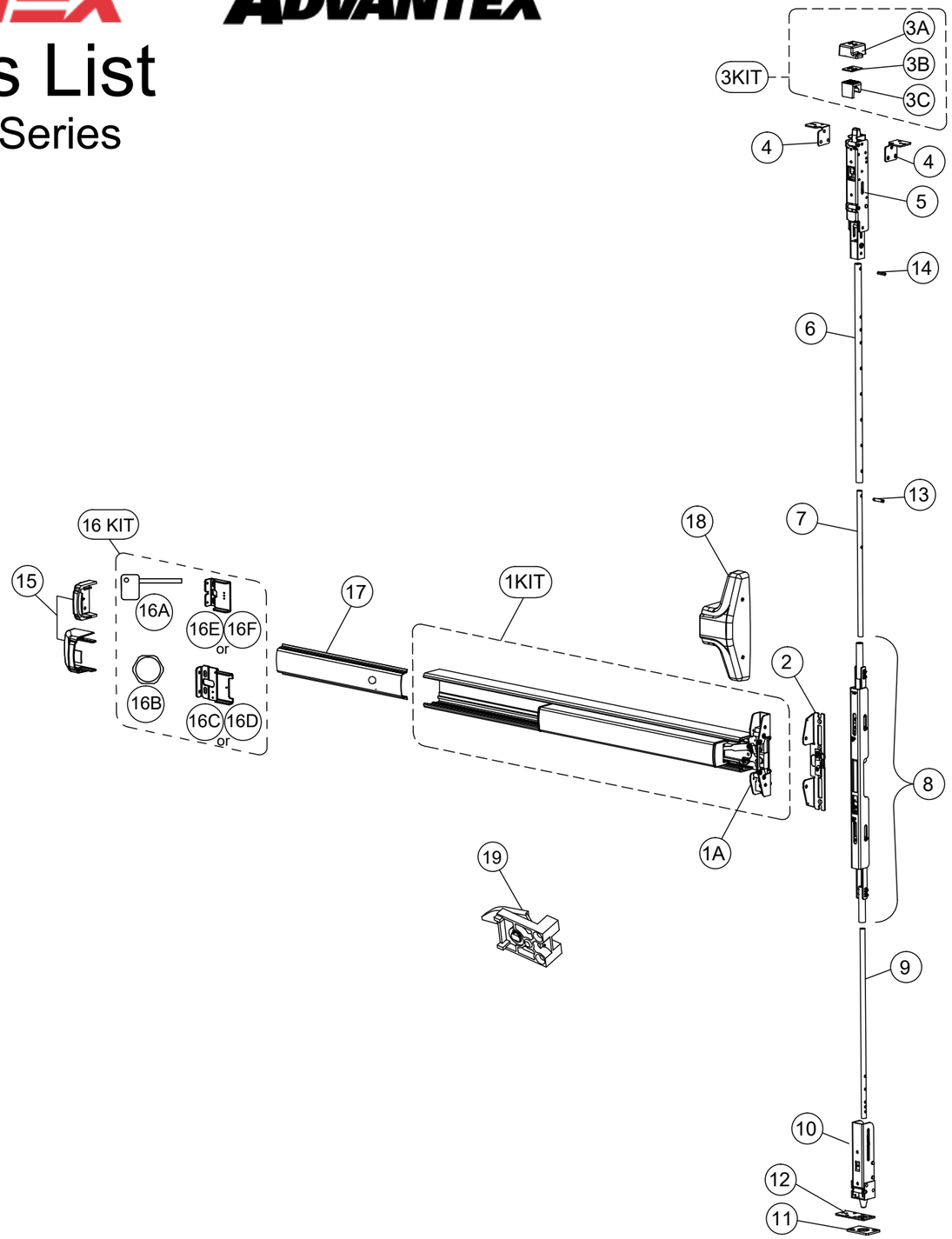

Item	Order Part #	Description	List Price
1KIT	105500-162	S&R CVR Centercase/Pushpad Assy, RHR	$2,377.00
	105500-163	S&R CVR Centercase/Pushpad Assy, LHR	$2,377.00
1A	104111-1	Centercase, CVR, Narrow, RHR	$255.96
	104111-2	Centercase, CVR, Narrow, LHR	$255.96
2	104148-1	Mounting Plate, Narrow, CVR, BP10	$57.24
	104148-2	Mounting Plate, Narrow, CVR, BP12	$58.32
3KIT	105257-2	Top strike kit	$109.08
3A	105235-1	CVR top strike pocket	$193.32
3B	105246	CVR strike shim	$11.36
3C	105236-1	CVR top strike insert	$50.76
4	104123-1	Top latch mounting bracket RHR	$21.55
	104123-2	Top latch mounting bracket LHR	$31.32
5	104121-1	Top latch (Panic)	$505.44
	104121-2	Top Latch (Fire)	$519.48
6	104187	Outer top rod, 7' thru 8'	$79.92
	105097	Outer top rod, 8'-1" thru 10'	$133.92
7	104172-1	Inner top rod, 7' thru 8'	$62.64
	104172-2	Inner top rod, 8'-1" thru 10'	$126.36
8	105990-1	Center lift mechanism assembly, Top & Bottom	$1,011.96
	105990-2	Center lift mechanism assembly, Top ONLY	$659.88
9	105098	CVR bottom rod	$95.04
10	104190-2	Bottom latch, HM application	$122.04
11	105257-3	95B Replacement strike kit	$44.28
12	104166	Bottom latch mounting bracket	$12.47
13	103423	Spring pin 3/16 x 1/2	$1.24
14	105296	Spring pin 3/16 x 13/16	$1.24
15	101642-9	Endcap, EC1 (ramped) Stainless Steel, 630	$110.00
	104304-9	Flush endcap, EC2, SS, 630	$102.00
16KIT	106431-1	Device Hardware Kit, HD, EC1	$43.20
	106431-2	Device Hardware Kit, CD, EC1	$42.12
	106431-3	Device Hardware Kit, EA, EC1	$93.96
	106431-21	Device Hardware Kit, HD, EC2	$57.24
	106431-22	Device Hardware Kit, CD, EC2	$56.16
	106431-23	Device Hardware Kit, EA, EC2	$110.16
16A	100450	Hex Key (for Hex Dogging)	$10.00
16B	100783	Cylinder Hex Nut	$9.00
16C	100147	Endcap bracket for EC1 (ramped endcap) without battery holder	$17.01
16D	101093	Endcap bracket for EC1 (ramped) endcap w/ battery holder	$22.68
16E	104303	Endcap bracket for EC2 (flush) endcap w/o battery holder	$44.28
16F	104636	Endcap bracket for EC2 (flush) endcap w/ battery holder	$44.28
17	100860-165	Fillerplate Subassembly, S&R, Hex Dogging, HD, 630	$228.00
18	104112-9	Centercase Cover, Stainless Steel, Narrow 630/628	$201.96
19	102216-2	Hex Dogging Assembly	$28.08
	102216	Cylinder Dogging Assembly	$21.55

Effective July 18, 2025
Modified July 22, 2025